

PROJECT

MODULAR FURNITURE SYSTEM

ASSEMBLY INSTRUCTIONS

CIE ITALIA SRL
Via dell'Industria 23/A – 20080 Albairate (MI) Italy
info@cie-italia.it - www.ordenaproject.com

PROJECT

FIXING THE WALL SPACER TO THE POLE



1. Attach the 'L' connector to the wall spacer using the screws provided

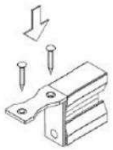

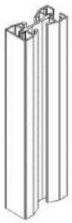

2. Attach the wall spacer to the pole ensuring the 'L' connector is screwed into the top of the pole





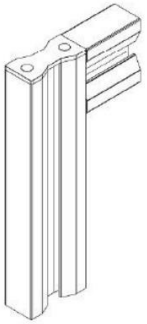

3. The spacer is now ready to be fixed to the wall

CIE ITALIA SRL

Via dell'Industria 23/A – 20080 Albairate (MI) Italy
info@cie-italia.it - www.ordenaproject.com

PROJECT

FIXING THE “HIGH LOAD” FOOT TO THE POLE

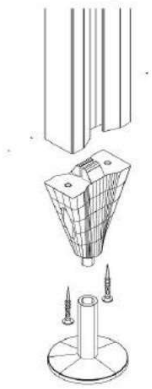

1. Attach the foot to the base of the pole using the screws provided

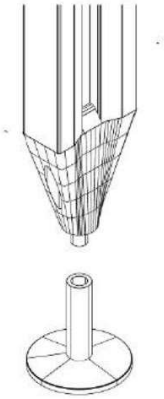

2. Screw the baseplate into the foot



3. The pole is now ready to put in position

CIE ITALIA SRL
Via dell’Industria 23/A – 20080 Albairate (MI) Italy
info@cie-italia.it - www.ordenaproject.com

PROJECT

FIXING THE POLE TO THE WALL

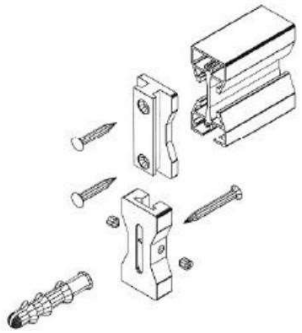

1. Fasten the fixing plate into the wall spacer attached to the pole using the correct screws

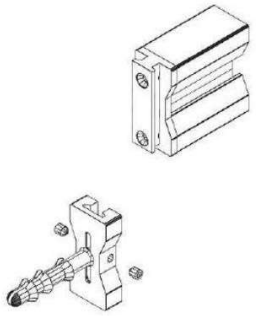

2. Attach the adaptor plate to the wall using the screw anchor provided

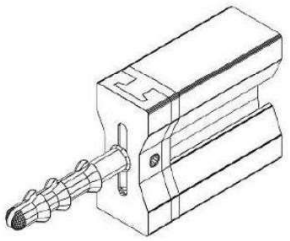

3. Slide the wall spacer and pole into the adaptor plate and secure it with the bolts provided

CIE ITALIA SRL
Via dell'Industria 23/A – 20080 Albairate (MI) Italy
info@cie-italia.it - www.ordenaproject.com

PROJECT

FIXING THE POLE TO THE CEILING

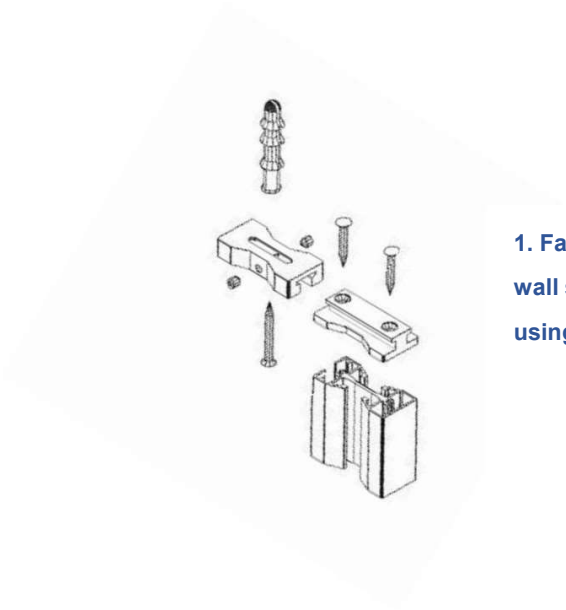

1. Fasten the fixing plate into the wall spacer attached to the pole using the correct screws

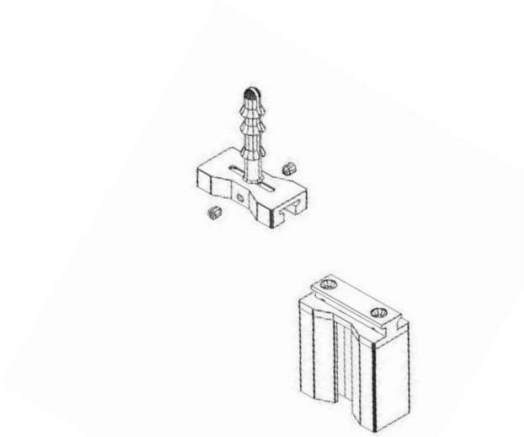

2. Attach the adaptor plate to the ceiling using the screw anchor provided

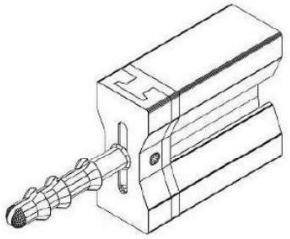

3. Slide the wall spacer and pole into the adaptor plate and secure it with the bolts provided

When installing on a ceiling, the pole must be 45mm shorter than the height of the ceiling (attachment + foot = 40mm).

CIE ITALIA SRL
Via dell'Industria 23/A – 20080 Albairate (MI) Italy
info@cie-italia.it - www.ordenaproject.com

PROJECT

FIXING THE SHELF BRACKETS



1. Insert the fastening screw into the T-nut in the shelf bracket

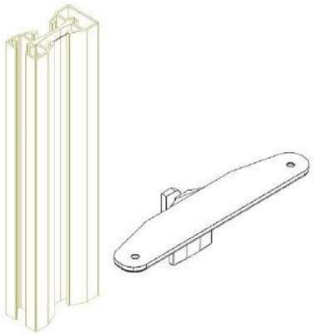

2. Slide the shelf bracket into the pole

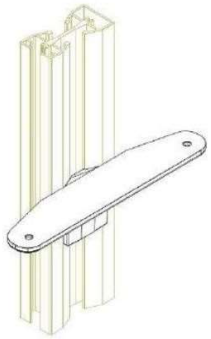

3. Use an Allen key to lock the T-nut and secure the shelf bracket

CIE ITALIA SRL
Via dell'Industria 23/A – 20080 Albairate (MI) Italy
info@cie-italia.it - www.ordenaproject.com

PROJECT

FIXING THE SLANTED SHELF BRACKETS

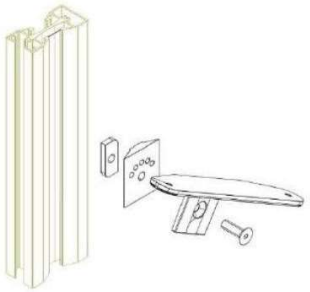

1. Insert the fastening screw into the T-nut in the shelf bracket at the desired angle

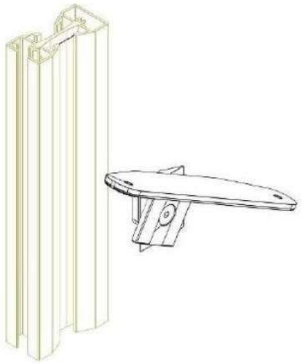

2. Slide the shelf bracket into the pole

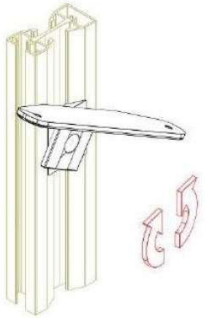

3. Use an Allen key to lock the T-nut and secure the shelf bracket

CIE ITALIA SRL
Via dell'Industria 23/A – 20080 Albairate (MI) Italy
info@cie-italia.it - www.ordenaproject.com

PROJECT

FIXING THE REINFORCEMENT CROSSBAR

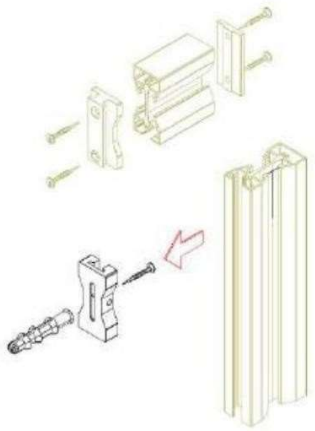

1. Attach the adaptor plate to the wall using the screw anchor provided

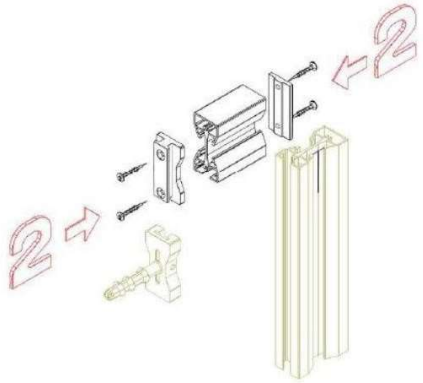

2. Screw the 2 fixing plates to both ends of the reinforcement crossbar

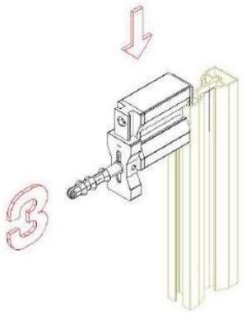

3. Slide the reinforcement crossbar downwards into the adaptor plate

CIE ITALIA SRL
Via dell'Industria 23/A – 20080 Albairate (MI) Italy
info@cie-italia.it - www.ordenaproject.com

PROJECT

FIXING THE DRAWER BRACKETS

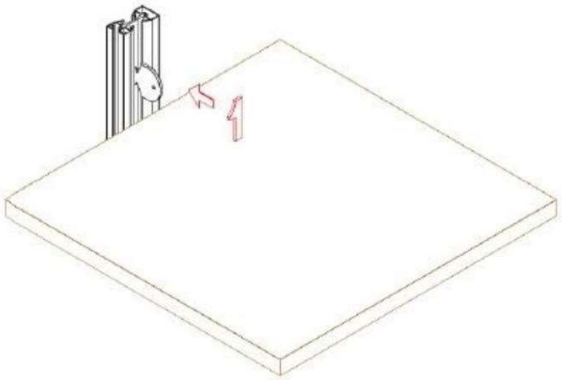

1. Insert the fixing plate vertically into the slot in the pole

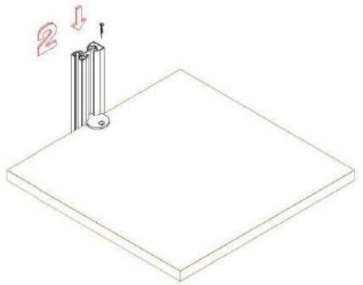

2. Rotate the fixing plate so the pre-drilled hole faces upwards and position it on the bracket

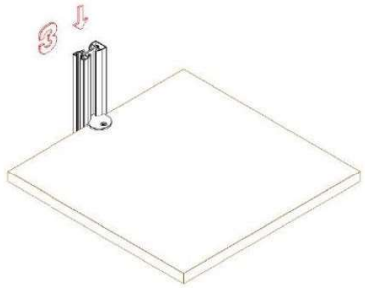

3. Screw the fixing plate to the drawer bracket

CIE ITALIA SRL
Via dell'Industria 23/A – 20080 Albairate (MI) Italy
info@cie-italia.it - www.ordenaproject.com